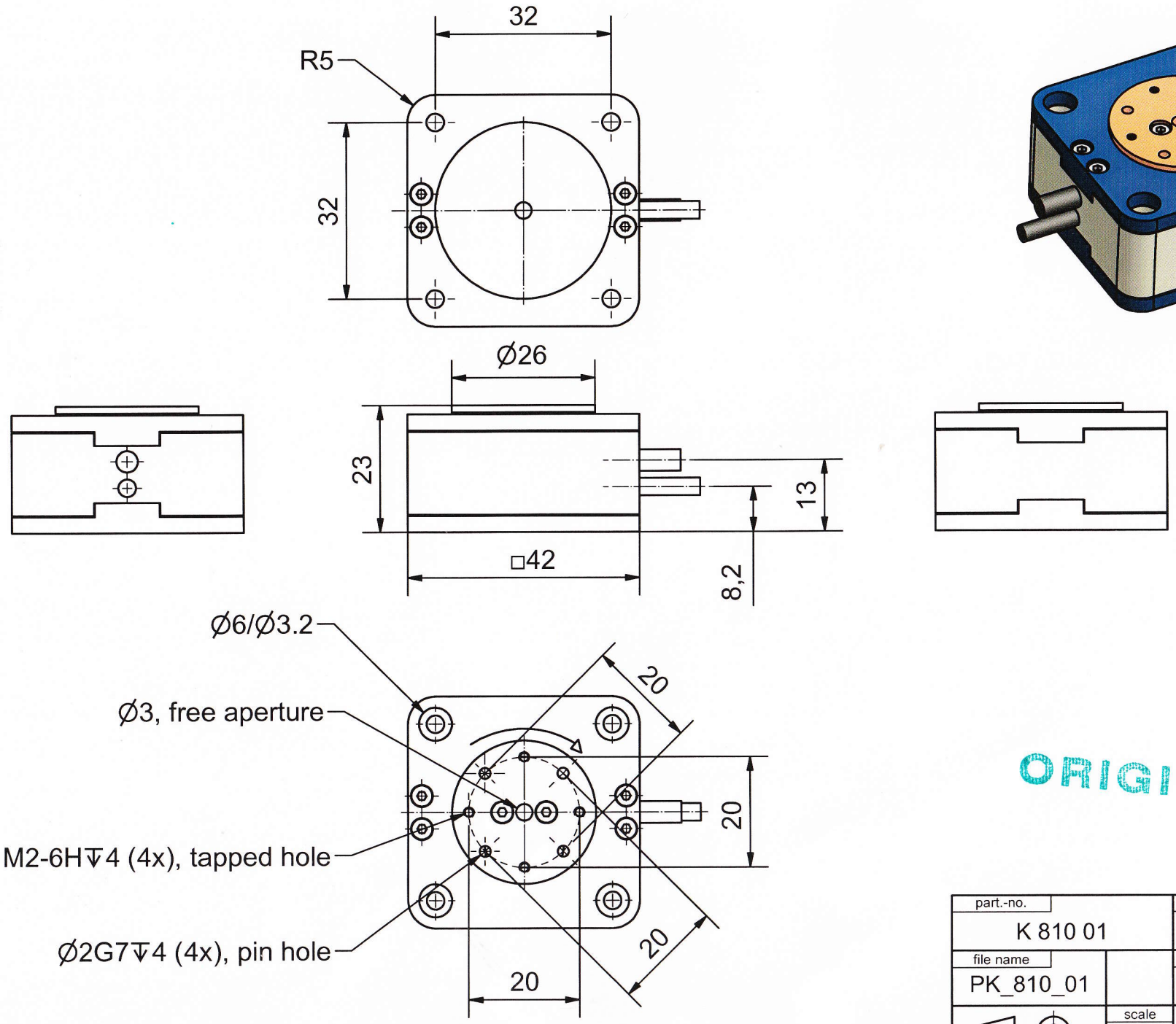

ORIGINAL

part.-no.	part.-name
K 810 01	ROTOR10SG
file name: PK_810_01	OK: date/sign. 29 SEP 2009
scale: 1:1	customers drawing: *piezosystem jena*